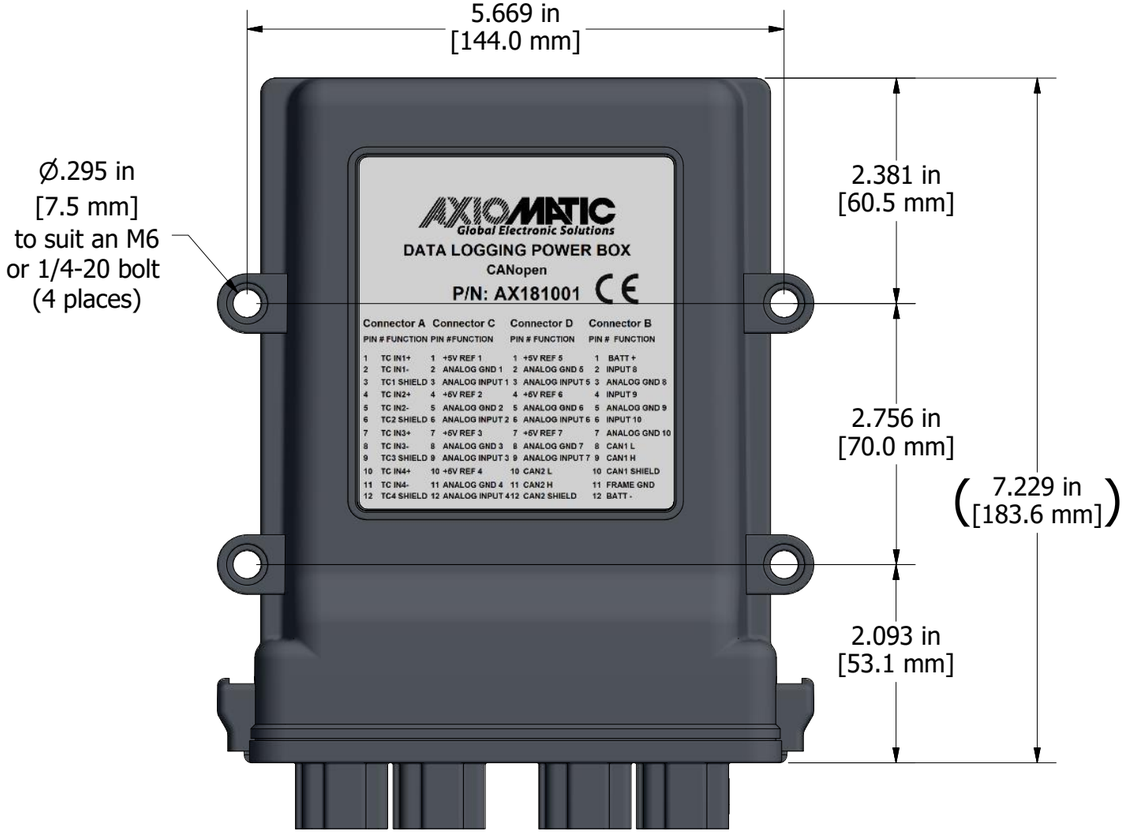

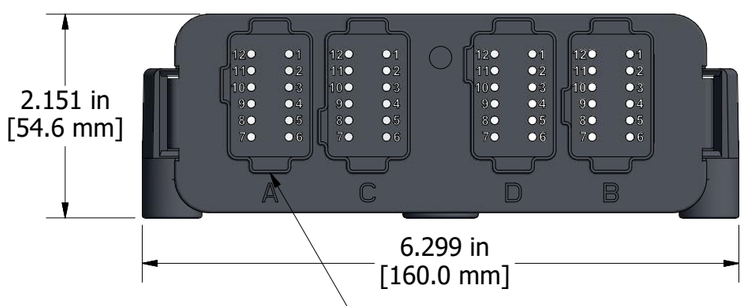

Deutsch **DT13-48PABCD-R015**
mates with Deutsch IPD **DT06-12S** plugs,
all modifications, keyed A - B - C - D

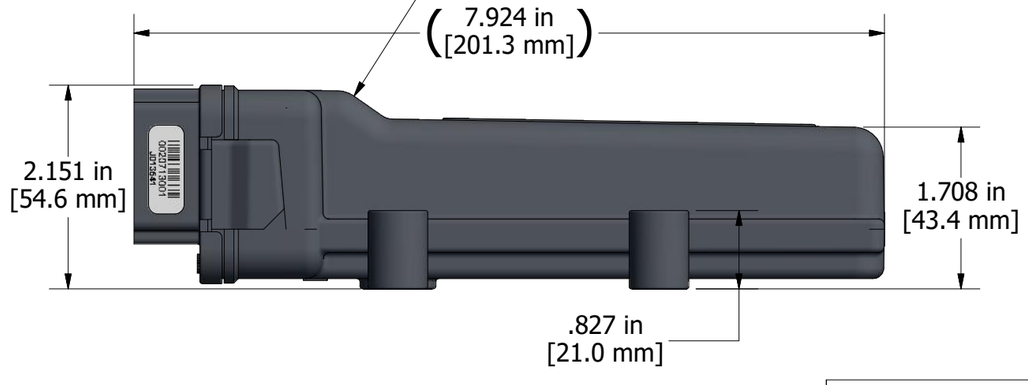

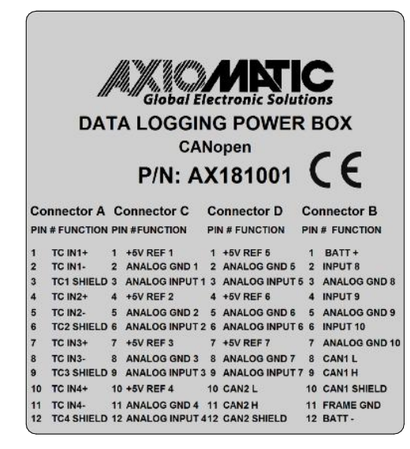

label detail

PROPRIETARY
THE INFROMATION CONTAINED IN THIS DRAWING IS CONDIFENTIAL AND PROPRIETARY AND REMAINS THE EXCLUSIVE PROPERTY OF AXIOMATIC TECHNOLOGIES CORPORATION. THIS DRAWING MAY NOT BE USED, REPRODUCED IN WHOLE OR IN PART, NOR REVEALED TO OTHERS WITHOUT THE PRIOR WRITTEN CONSENT OF AXIOMATIC TECHNOLOGIES CORPORATION. BY ACCEPTANCE OF THIS DRAWING, THE BEARER AGREES TO THE THESE CONDITIONS.

AXIOMATIC TECHNOLOGIES CORPORATION
5915 WALLACE ST.
MISSISSAUGA, ON
CANADA L4Z1Z8
905-602-9270

TOLERANCES

fabrication		machining	
X.XXX	+/- 0.015	X.XXX	+/- 0.001
X.XX	+/- 0.031	X.XX	+/- 0.005
X.X	+/- 0.031	X.X	+/- 0.015
fractional	+/- 0.031	fractional	+/- 0.031

MATERIAL: high temperature nylon housing with silicone gasket	DRAWN: TF	DATE: 2013-04-03	TITLE: TC/Analog/Digital Inputs to CAN Controller		
	CHECKED: DL	DATE:	DWG REV: D1	DWG NO: AX181001	PART REV: A
	APPROVED: DL	DATE:	SCALE: full	PART NO: AX181001-MD	SHEET: 1 of 1