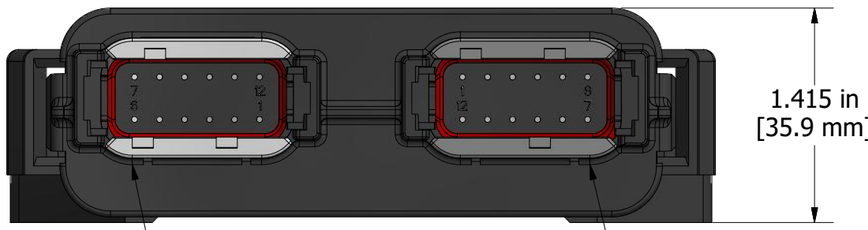

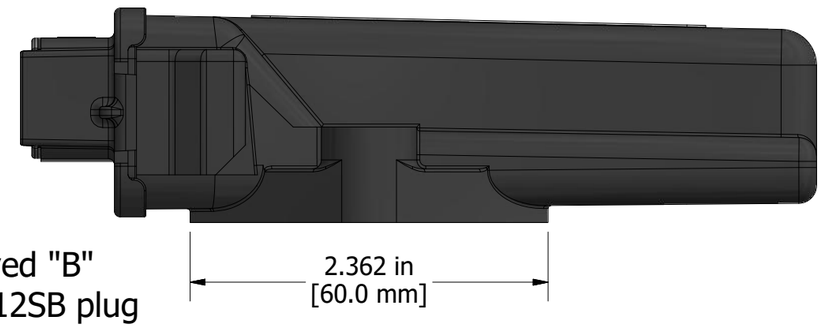

Gray receptacle keyed "A"
mates with DTM06-12SA plug

Black receptacle keyed "B"
mates with DTM06-12SB plug

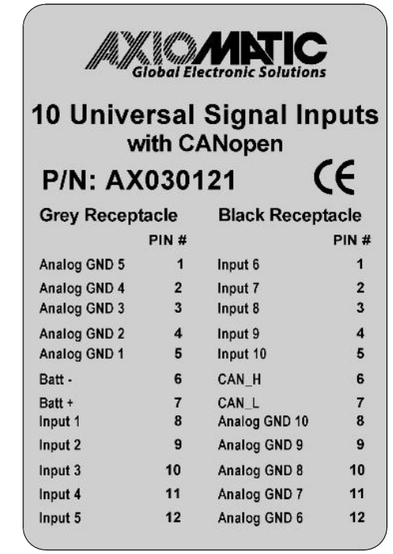

Unit Label

Ø.291 in
[Ø7.4 mm]
To suit an M6 or
1/4" bolt (2)

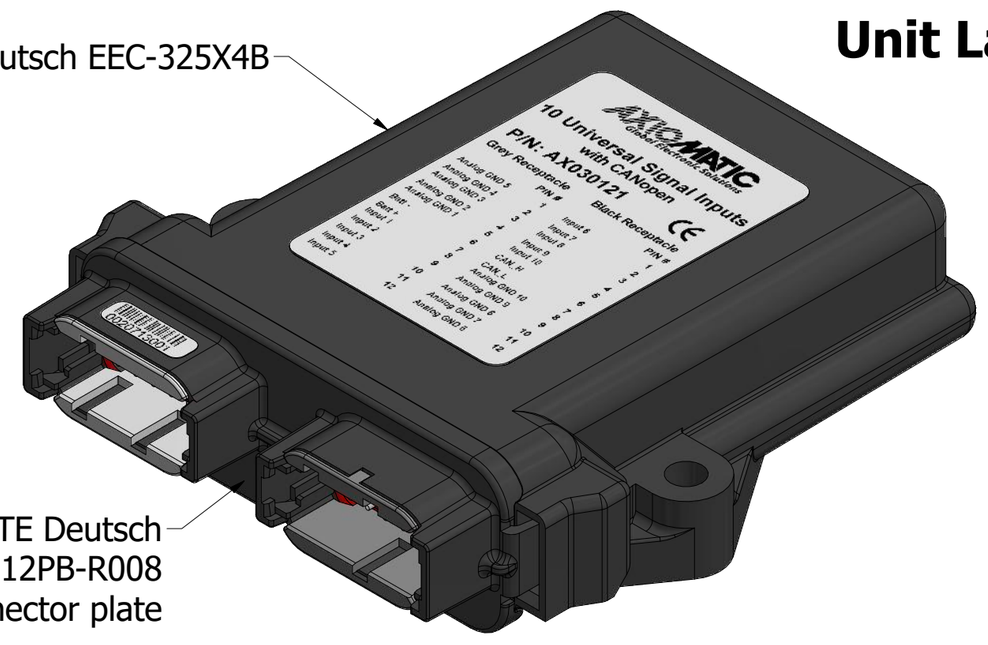

PROPRIETARY
THE INFROMATION CONTAINED IN THIS DRAWING IS CONDIFENTIAL AND PROPRIETARY AND REMAINS THE EXCLUSIVE PROPERTY OF AXIOMATIC TECHNOLOGIES CORPORATION. THIS DRAWING MAY NOT BE USED, REPRODUCED IN WHOLE OR IN PART, NOR REVEALED TO OTHERS WITHOUT THE PRIOR WRITTEN CONSENT OF AXIOMATIC TECHNOLOGIES CORPORATION. BY ACCEPTANCE OF THIS DRAWING, THE BEARER AGREES TO THE THESE CONDITIONS.

AXIOMATIC TECHNOLOGIES CORPORATION
5915 WALLACE ST.
MISSISSAUGA, ON
CANADA L4Z1Z8
905-602-9270

TOLERANCES

fabrication		machining	
X.XXX	+/- 0.015	X.XXX	+/- 0.001
X.XX	+/- 0.031	X.XX	+/- 0.005
X.X	+/- 0.031	X.X	+/- 0.015
fractional	+/- 0.031	fractional	+/- 0.031

MATERIAL: High Temperature Nylon housing	DRAWN: WA	DATE: 2013-11-29	TITLE: 10 Universal Signal Inputs CAN Controller, CANopen		
	CHECKED: DL	DATE:	DWG REV: D2	DWG NO: AX030121-MD	PART REV: A
	APPROVED: DL	DATE:	SCALE: Full	PART NO: AX030121	SHEET: 1 of 1